Simple Network Diagram

版 別：1.0

制訂日期：2024 年 11 月 27 日

修訂日期：2024 年 11 月 27 日

制修部門：稽核室

頁 數：X

核准	審查	制定

表單編號/版次：XXXXXXXXX

文件發行/修訂記錄

版次	發行日期	生效日期	制修內容摘要
1.0			

手冊編號：XXXXXXXX

CONTENTS

1. Introduction 4
1.1 Purpose and Objectives 4
1.2 Scope of application 4
1.3 Glossary of Term and Definitions 4
1.3.1 Definitions 4
1.3.2 Abbreviations 4
1.4 Applicable Documents 5
1.4.1 Employer's Requirements 5
1.4.2 Related Documents 5
2. Project Assets And SuC Description 6
2.1 SuC Description 6
2.2 The initial assets of the SuC 7
3. Simple Network Diagram 7

1.0 Introduction

1.1 Purpose and Objectives

The purpose of this document is to document a Project/System Simple Network Diagram. This document describes the Simple Network Diagram of the dummy project. This document also describes the assets and SuC for thr security context of this dummy project.

1.2 Scope of application

The System under Consideration (SuC) includes the power switch control system and Networks of the substation, the applicable scope of systems for this management plan includes:

1. Power switch control system:
   - SCADA system
   - Safety Control system
   - Configuration & Auxiliary management system

1.3 Glossary of Term and Definitions

1.3.1 Definitions

Definition	**Description**
Asset Owner	Individual or organization responsible for one or more Industrial Automation and Control Systems (IACSs).
Automation Solution	Control system and any complementary hardware and software components installed and configured to operate in an IACS.
Component	One of the parts that make up a product or system.
Dependent Component	Component external to the product on which the product depends.
Integration Service Provider	Service provider that provides integration activities for an Automation Solution including design, installation, configuration, testing, commissioning, and handover.
Maintenance Service Provider	Service provider that provides support activities for an Automation Solution after handover.
Product Supplier	Manufacturer of hardware and/or software products.
Recovery Point Objective	Time value that determines the maximum tolerable period of data loss due to a disaster (e.g., data corruption).
Recovery Time Objective	The overall length of time an information system’s components or an operation system’s components can be in the recovery phase before negatively impacting the organization’s mission or mission/business/operating functions.
Service Provider	Individual or organization (internal or external organization, manufacturer, etc.) that provides a specific support service and associated supplies in accordance with an agreement with the asset owner.

1.3.2 Abbreviations

Abbreviation	Clarification
SAT	Site Acceptance Test
SCS	Substation Control System
SIT	Site Integration Test

1.4 Applicable Documents

1.4.1 Employer’s Requirements

No	Employer’s DOC No	DOC Title
1		
2		
3		

1.4.2 Related Documents

No	Project’s DOC No	Employer’s DOC No	DOC Title
1	DUMMY202400##	BOSS202400##	Dummy - Preliminary network diagram
2			
3			
4			
5			

2.0 Project Assets And SuC Description

2.1 SuC Description

A substation is a complex system composed of many elements such as transformers, capacitors, voltage regulators, and circuit breakers. Automated substation control will be implemented extensively in the smart grid systems to provide real-time monitoring and control through local area networks. Figure 2-1 shows the system architecture diagram of a substation.

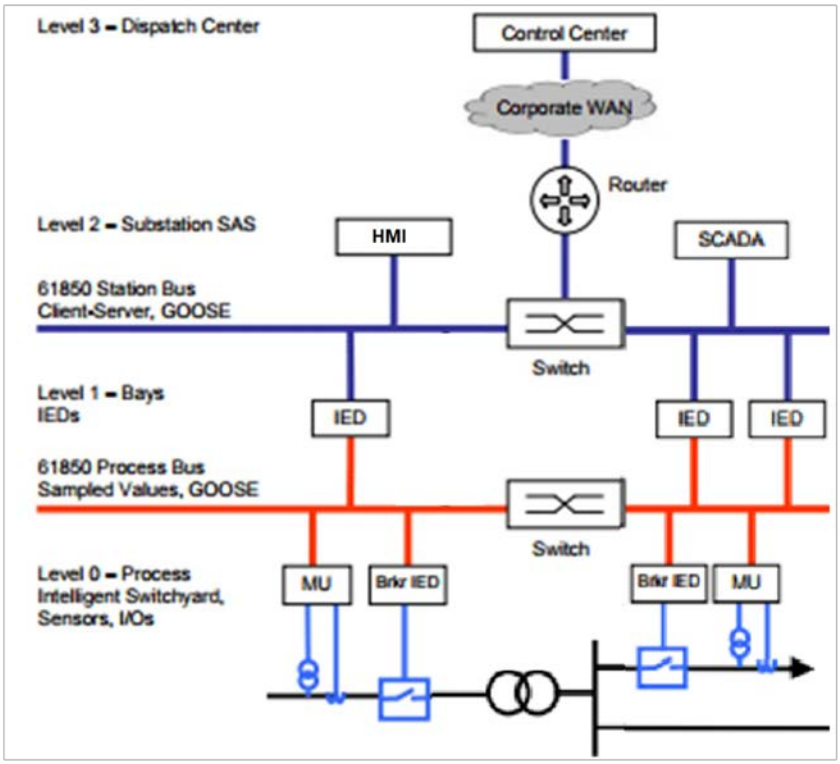

Figure 2-1 The system architecture diagram of the substation.

Substations are a critical component for maintaining electrical supply and load control in low voltage, medium voltage and high voltage electrical distribution networks. In order to ensure the proper functioning of substations and related equipment such as line-mounted switches and capacitors, most utilities use SCADA (supervisory control and data acquisition) systems to automate monitoring and control.

New sites typically implement a SCADA system to monitor and control substations and related equipment. However, older facilities can also benefit by adding a SCADA system or by upgrading an existing SCADA system to take advantage of newer technologies.

Not only will a new or upgraded SCADA system provide better monitoring and control, it can also extend the life of substations and related equipment by providing current data for troubleshooting small

problems before they escalate. Furthermore, the ample historical data provided by SCADA systems can improve preventive maintenance scheduling and cut associated costs.

Electrical distribution systems involve many remote applications and sites, and monitoring and controlling these sites has often been difficult. To solve this problem, utilities began installing remote terminal/telemetry units (RTUs) at substations. Early RTUs were initially custom-made units, but later versions relied on standard hardware such as programmable logic controllers (PLCs) or industrial PCs. Intelligent electronic devices (IEDs) are a more recent technology development, and these devices are now installed at most substations to some extent. These IEDs generally communicate with the substation RTU.

Power distribution to various electrical loads at substations is controlled by switchgear feeders. Sensors mounted on the switchgear collect various data on current, voltage, power and switchgear status. This data is transferred to the RTU, which is in turn polled by a SCADA system.

The SCADA system consists of a master control station with one or more PC-based human machine interfaces (HMIs). The SCADA system may also contain other secondary control stations with HMIs, and large substations may also have local HMIs.

Operators view information on the HMIs to monitor and control substation operations and related equipment. Modern SCADA systems are extremely adept at handling the large amounts of data necessary to monitor the electrical state of all power lines, cables and equipment.

2.2 The initial assets of the SuC

The initial assets of the system under consideration (SuC) corresponds to the scope of work in this project include :

1. SCADA system:
   (1) SCADA HMI
   (2) IED (Control)
   (3) Ethernet Switch
2. Safety Control system
   (1) IED (Protection)
3. Configuration & Auxiliary management system
   (1) Wireless AP (could be connected to a laptop)

3.0 Simple Network Diagram

The Simple Network Diagram of the SuC could refer to Figure 2-2 Simple Network Diagram of the SuC. For detail could refer to “Dummy - Preliminary network diagram.pdf”

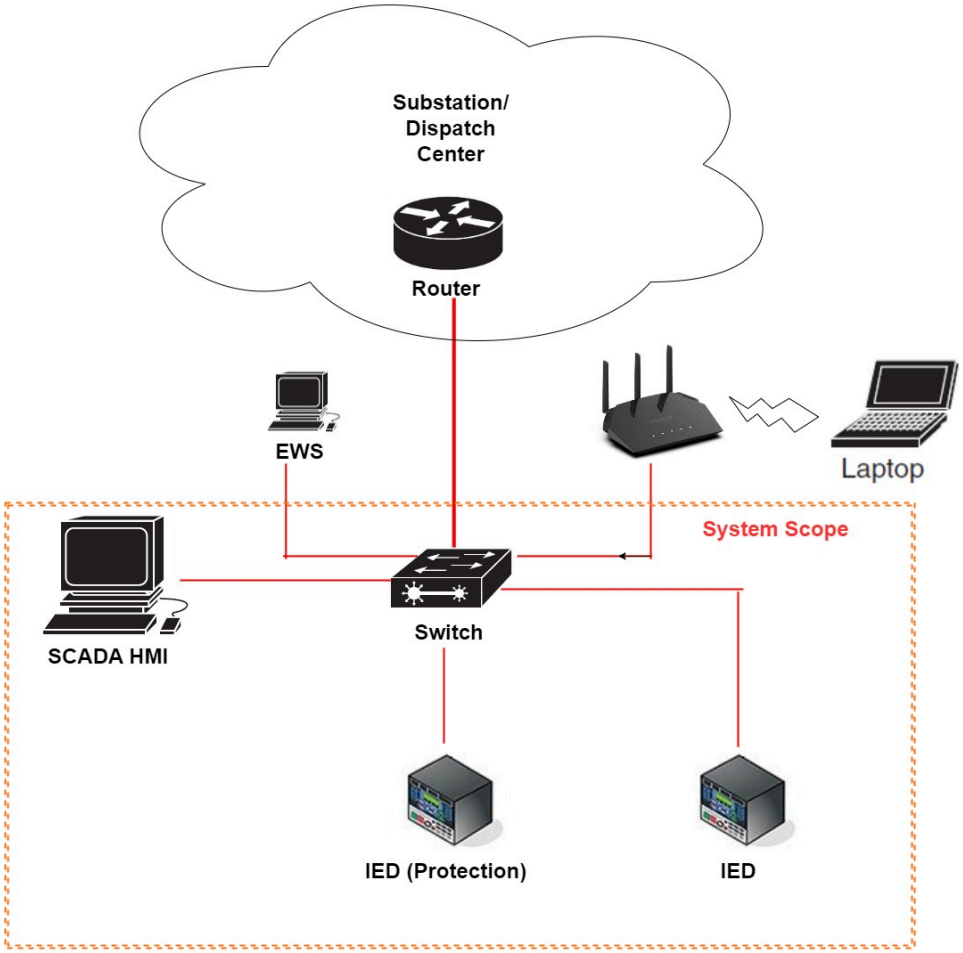

D				
C				
B			Mars	
A			Mars	Document created
Rev.	Date	Accep.	Appr.	Description

CONTRACTOR		Document No.
Drawn by	Accepted	Approved
Scale / Size	TPC Document No.	
Supplier		Supplier Document No.

Figure 2-2 Simple Network Diagram of the SuC.

<<Text End>>